FLANGE	SQUARE	CIRCULAR
TOP	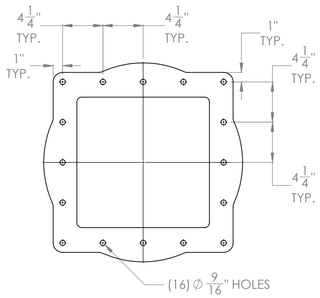	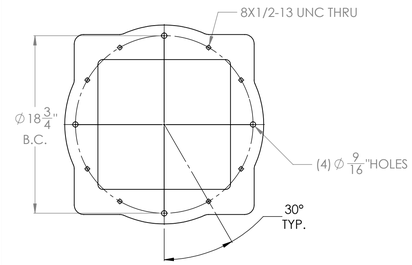
BOTTOM	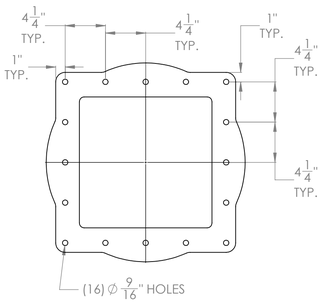	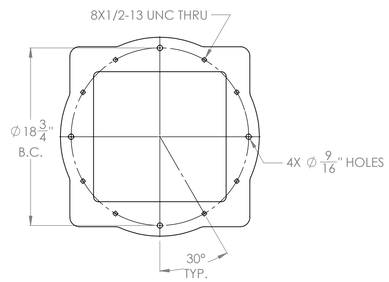

OTHER BOLT PATTERNS ARE AVAILABLE UPON REQUEST.

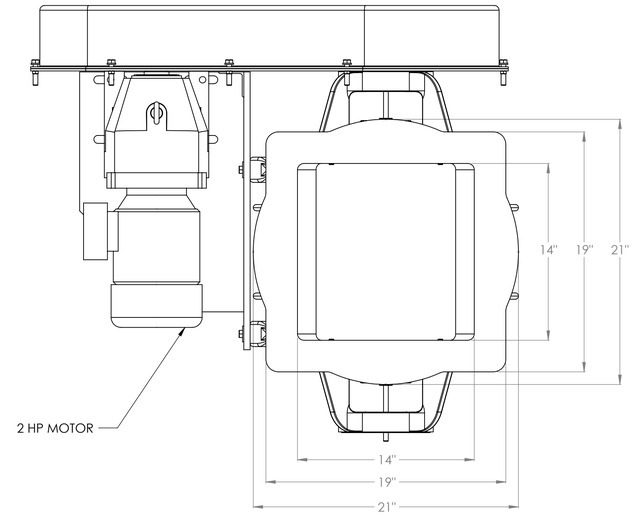

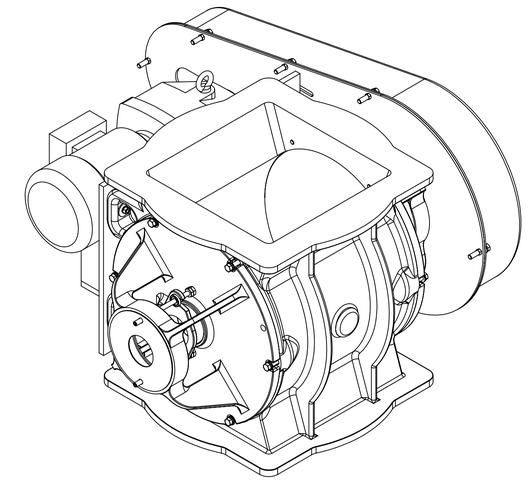

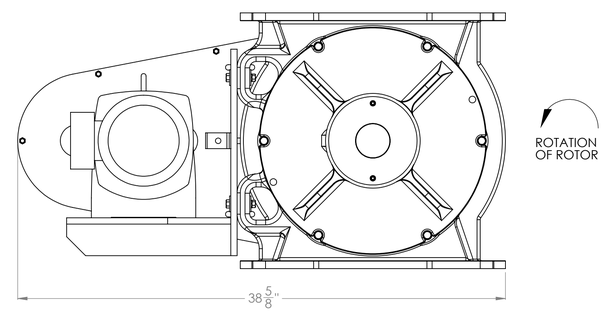

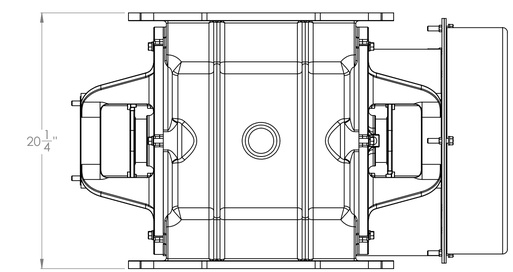

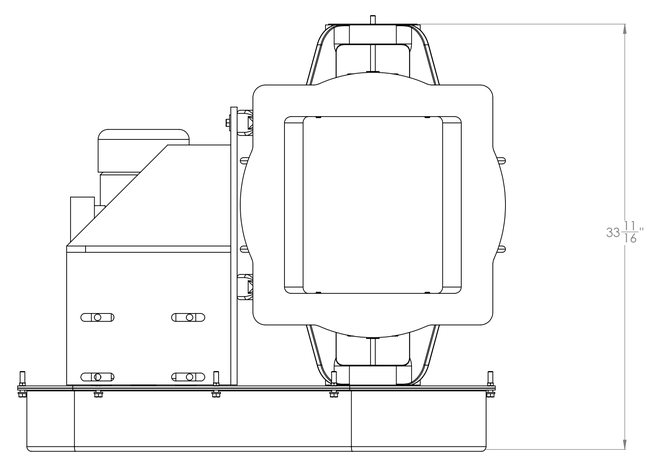

NOTES:

GENERAL LAYOUT DRAWING ONLY.
NOT FOT CONSTRUCTION PURPOSE.

PART NUMBER
PAV-14_FULL

PROPRIETARY AND CONFIDENTIAL
THIS DRAWING IS THE PROPERTY OF PRATER INDUSTRIES, WHO CLAIMS PROPRIETARY RIGHTS IN THE MATERIAL DISCLOSED. IT IS ISSUED IN CONFIDENCE FOR ENGINEERING INFORMATION ONLY AND MAY NOT BE COPIED OR USED FOR MANUFACTURE OF ANYTHING SHOWN WITHOUT WRITTEN PERMISSION FROM PRATER INDUSTRIES.

STOCK SIZE	WEIGHT	MATERIAL	STOCK NO
N/A	733.92	N/A	N/A

PRATER
2 SAMMONS COURT BOLINGBROOK, IL
TELEPHONE: (630)-759-9595 FAX: (630)-759-6089

DESCRIPTION
PAV-14 SK DRAWINGS

USED IN: N/A

REMOVE ALL BURRS AND BREAK ALL SHARP CORNERS	MACHINING TOLERANCES	DRAWN BY	DATE	SCALE	SIZE
THIRD ANGLE PROJECTION	DECIMAL (UOS) XX = ± .010 XXX = ± .005	RP	10/17/2018	1:6	D
	FRACTIONAL (UOS) (ALL) = ± 1/64	CHECKED BY	DATE	PART NUMBER	
	ANGULAR (UOS) (ALL) = ± 30'	APPROVED BY	DATE	**PAV-14_FULL**	

M:/Engineering/Solidworks/SolidWorks Assemblies/AIRLOCKS/PAV-14/